REVISION	DATE	CHANGE DESCRIPTION	PROVIDE BY
01	2019-04-03	Dimensions of holes for new diameters of pipes have been updated ,new dimension and hole for PBU have been added.	Bieganowski
02	2019-04-29	Hole has been added, dimensions of other holes were updated.	Bieganowski
03	2019-11-09	Hole diameters has been changed, fitting has been added, remarks has been changed.	Bieganowski
04	2020-03-25	Hole diameters has been changed.	Bieganowski

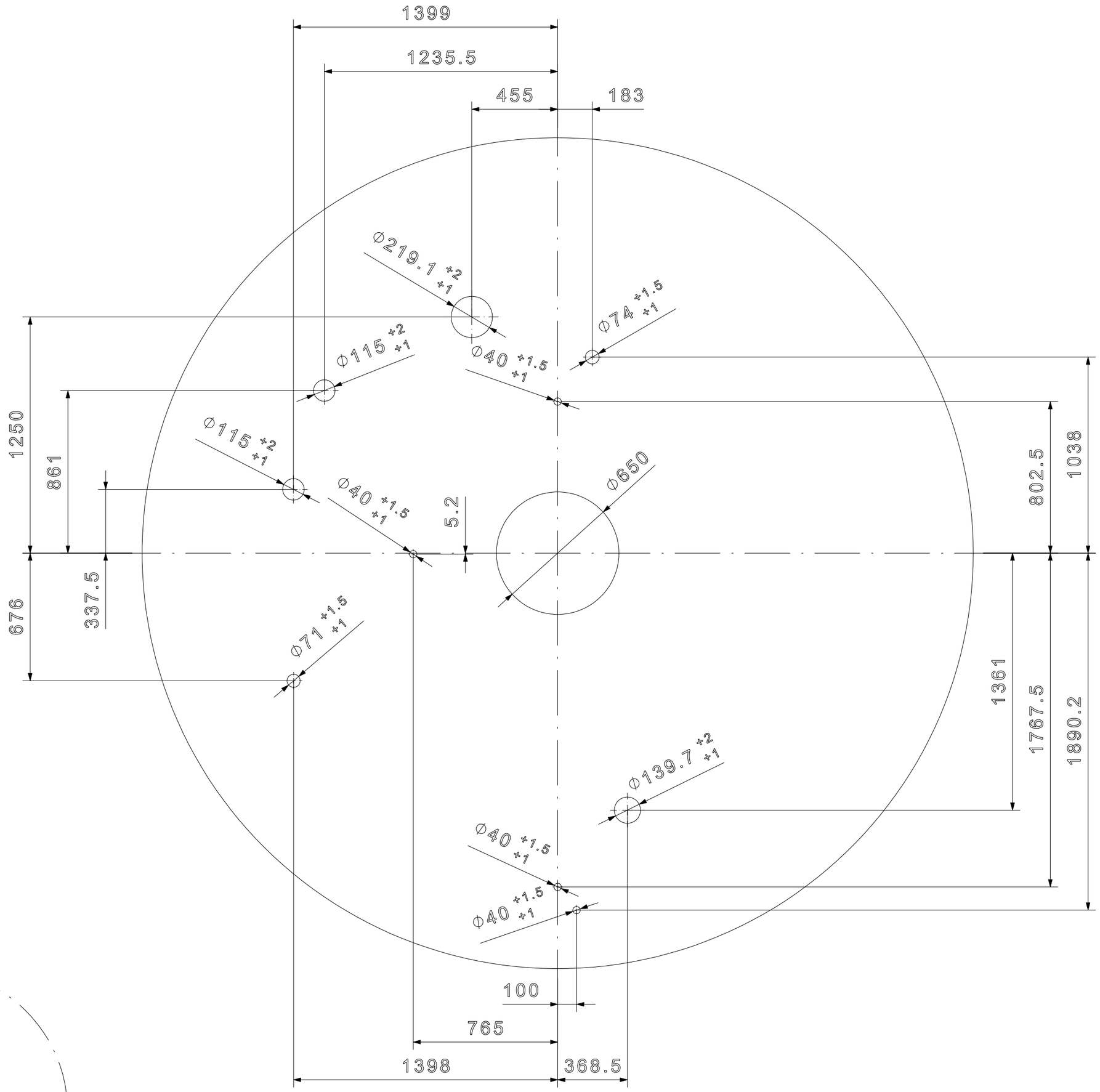

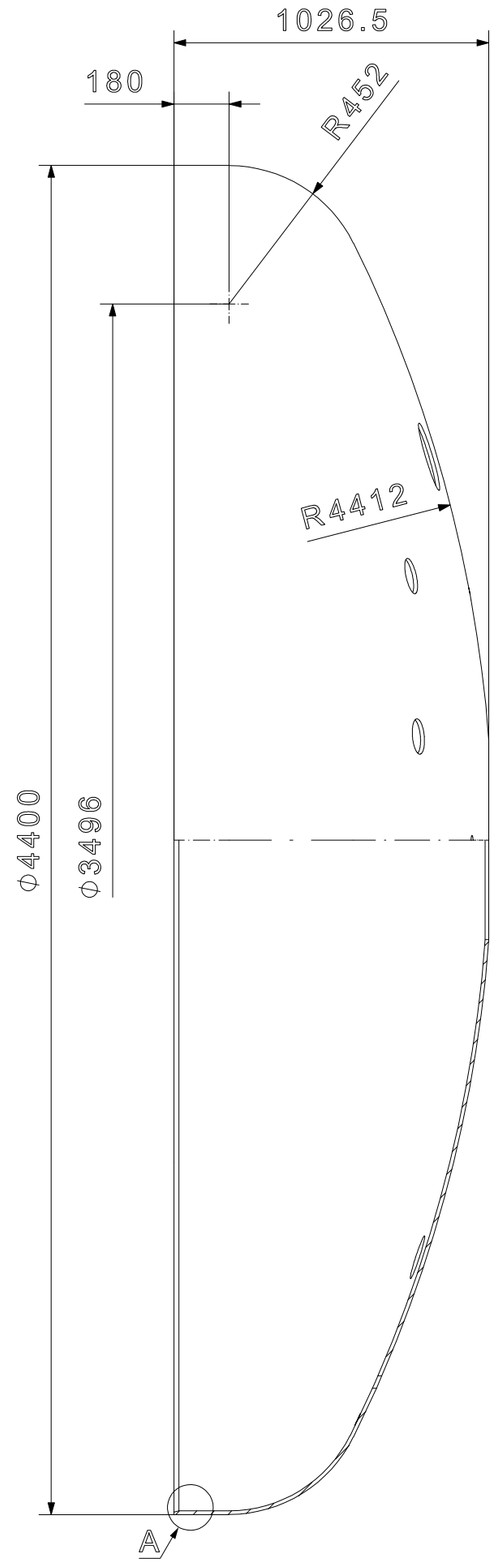

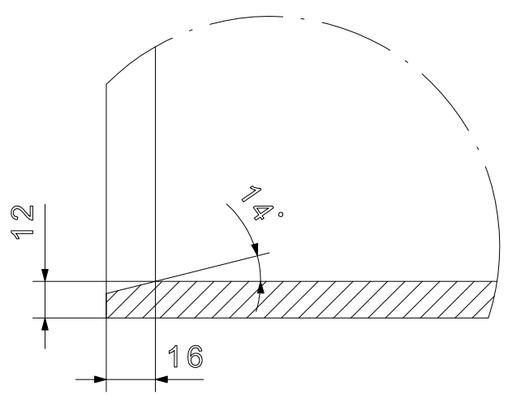

Detail A
Scale: 1:2

REMARKS:
1. Dimensions without tolerance in according to ISO 13920-BF, ISO 2768-mK.
2. Part make in according to DIN 28011.
3. Minimum thickness of a dish end should not be less than 12 mm.

Drwaings are property of REMONTOWA LNG SYSTEMS SP. z o.o. and can not be copied photographed or made available to third parties without permission.

DREW: mgr inż. M. Bieganowski	DATE: 2018-11-15	DRAWING TITLE: Dish end of vacuum jacket with a hole			
CHECKED: dr inż. J. Poliński	DATE	SIZE: A2	DRAWING NUMBER: RLS.01.004	MATERIAL: 1.4306	REVISION: 04
DESIGNED: dr hab. inż. J. Skrzypacz	DATE	SCALE: 1:20	WEIGHT (kg): 1 995,26	QUANTITY: 1	SHEET: 1/1